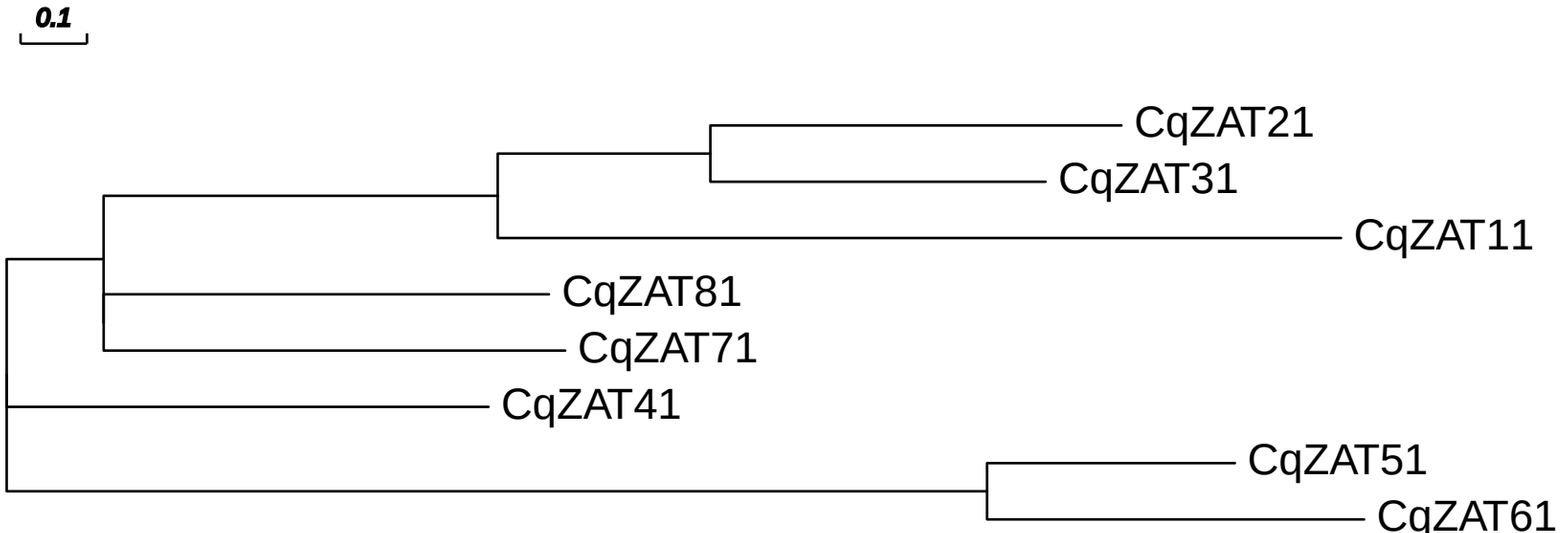
0.1
CqZAT21
CqZAT31
CqZAT11
CqZAT81
CqZAT71
CqZAT41
CqZAT51
CqZAT61